37-252.2 (01-11)

Allegion NL B.V. - Energiestraat 2 - 3903 AV Veenendaal - Nederland - info.axa.home@allegion.com - axahomesecurity.com



AXA HOME/SECURITY

EN

Security rim lock 3015

SKG

POLITIE KEURMERK VEILIG WONEN

Informatie

You have just acquired a high quality AXA product. The instructions below must be followed closely in order to effectively install and operate this product.

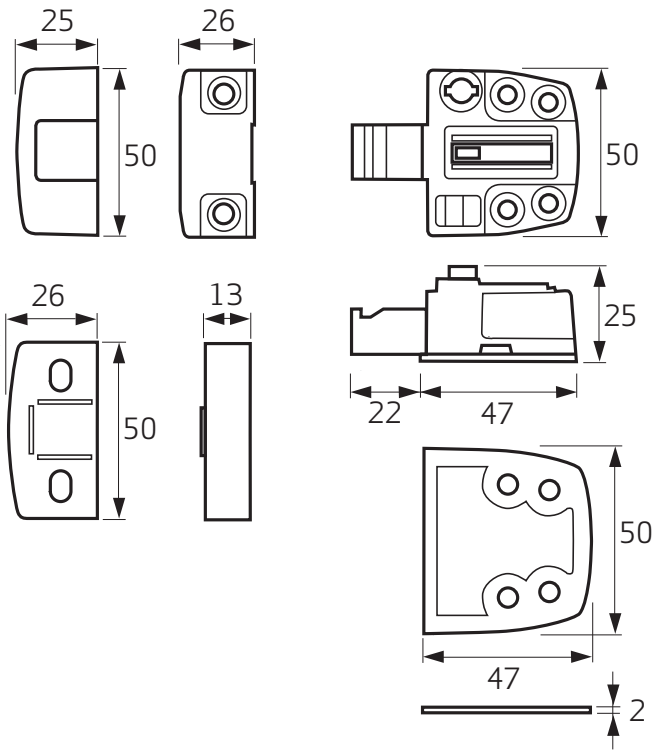

Screw thickness	Pre-drilling softwood	Pre-drilling hardwood
4,0 mm	Ø 2,5 mm	Ø 3,0 mm
5,0 mm	Ø 3,0 mm	Ø 3,5 mm

Mounting position

Left, right or above

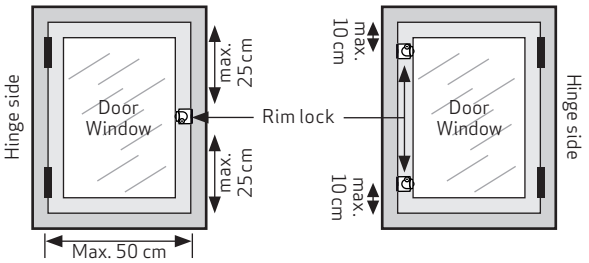

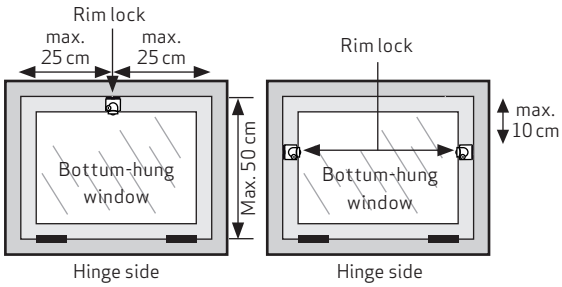

Application

For inward-opening wooden windows and doors (both rebated and flush types) in combination with wooden frames.

Installation tools (recommended)

Tape measure, (battery) drill, screwdriver, drill Ø 2,5, 3 and/or 3,5 mm, bradawl/pencil.

Recommended screws: 4,0 x 40 mm and 5,0 x 80 mm

Minimum installation space required

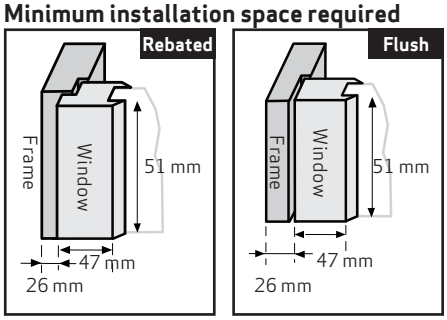

User manual

Open

Insert the key into the lock and turn it approximately 45° counter-clockwise. The lock pops open.

Close

Slide the lock shut. The key is not required for this.

Maintenance

Regularly (at least once a year) spray the cylinder and mechanism with lock spray.

37-252.2 (01-11)



AXA HOME/SECURITY

EN

Security rim lock 3015

SKG

POLITIE KEURMERK VEILIG WONEN

Installation manual

For inward-opening wooden rebated windows and doors

1 Close window/door.
2 Position the drilling template for the rim lock (figure **A**).
3 Mark the screw holes for the lock and the strike plate.
4 Screw the lock onto the window (figure **B**) using the screws (4,0 x 40 mm) in the indicated order.
5 Position the strike plate drilling template (figure **C**) so that the folded edge is pushed against the window/door, and mark the drill holes.
6 Drill from below at an angle of 10° (figure **D**).
If necessary, compensate for any height difference using the supplied shims.
7 Mount the necessary shims, the 13 mm washer plate, and the strike plate using the screws.(5,0 x 80 mm). Drive screws at a 10° angle (figure **D**)!
8 Place the plastic cover over the rim lock so that the sliding knob aligns with the catch of the rim lock (figure **E**).
9 Place the plastic cap on the strike plate (figure **E**).

For inward-opening, flush-fitting (rebate-free) wooden windows and doors.

1 Close window/door.
2 Position the drilling template for the rim lock (figure **F**).
3 Mark the screw holes for the lock and the strike plate.
4 Screw the lock onto the window (figure **G**) using the screws (4,0 x 40 mm) in the indicated order.
5 Drill from below at an angle of 10°(figure **H**).
If necessary, compensate for any height difference using the supplied shims.
6 Mount the necessary shims, the 13 mm washer plate, and the strike plate using the screws.(5,0 x 80 mm). Drive screws at a 10° angle (figure **D**)!
7 Place the plastic cover over the rim lock so that the sliding knob aligns with the catch of the rim lock (figure **I**).
8 Place the plastic cap on the strike plate (figure **I**).

