Allegion NL B.V. - Energiestraat 2 - 3903 AV Veenendaal - Nederland - info.axa.home@allegion.com - axahomesecurity.com
37-278.2 (05-26)



AXA HOME SECURITY

EN

Letter plate

Information

You have just acquired a high quality AXA product. The instructions below must be followed closely in order to effectively install and operate this product.

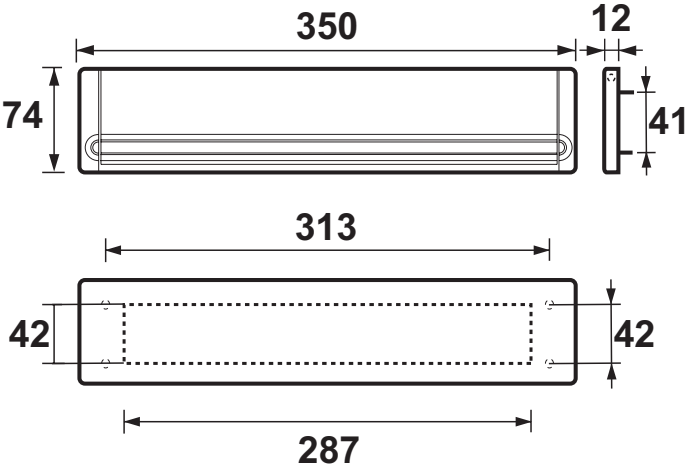

Installation tools (recommended)
Tape measure, (battery) drill, screwdriver, jigsaw, drill Ø 2 mm, bradawl/pencil.

Recommended fasteners: 3,0 x 20 mm

Screw thickness	Pre-drilling softwood	Pre-drilling hardwood
3,0 mm	Ø 2,0 mm	Ø 2,0 mm

Manual

1. At the point where the letterplate is to be fitted, cut a slot 50 mm high and 290 mm wide.
2. Insert the letter plate into the slot, pressing it firmly against the top.
3. Mark out the screw holes.
4. Fasten the letter plate using 3.0 x 20 mm screws.
5. Using the self-adhesive letters provided, stick the name of your choice onto the nameplate.
6. Slide the nameplate from the left or right-hand side into the aluminium letterplate (figure **A**).

