73.015.2 (2-17)



AXA HOME/SECURITY

NL

Door security strip M2-IN

Inward opening doors and front doors

Information

You have just acquired a high quality AXA product. The instructions below must be followed closely in order to effectively install and operate this product.

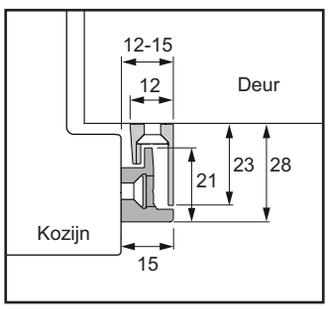

Use
Inward opening doors and front doors.

Installation tools (recommended):
Tape measure, (battery) drill, screwdriver, Ø 2.5 mm drill bit, hacksaw or grinder, pencil or bradawl.

Assembly location
Closing side of the door

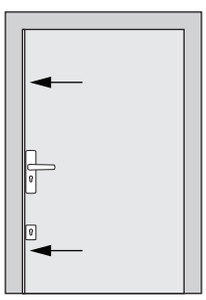

Minimum required assembly space

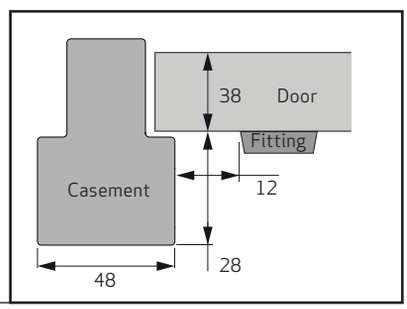

Installation manual

For problem-free operation of this product you must follow the instructions below carefully.

1. Define the length of the door on the closing side. Shorten both the door strip and the frame strip to this length <u>at the top</u> using a hacksaw or grinder (figure **A**).
2. Position the door strip on the door at a distance of 2 mm from the transom (or otherwise if possible, flush with the transom). Mark off one installation hole at each end and in the middle and pre-drill these (Ø 2.5 mm figure **B**).

For the door strip use 4.0 x 40 mm screws and for the frame strip use 4.0 x 50 mm screws

Pre-drill carefully (note door thickness)
Do not drill through the lock case, no screws are required for this

3. Screw the door strip tight at these three points (4.0 x 40 mm figure **C**).
4. Position the frame strip on the transom at a distance of 2 mm from the door strip. Mark off one installation hole at each end and in the middle and pre-drill these (Ø 2.5 mm figure **D**).
6. Tighten the frame strip at these three points (4.0 x 50 mm, figure **E**).
7. Check that the door works properly in combination with the door security strip. If the strip sections rub, the strip must be moved. Fix it temporarily at three other screw locations and check the functionality (figure **F**).
8. If it works properly, pre-drill the other holes in the door strip (Ø 2.5 mm) and screw the door strip tight (4.0 x 40 mm).
9. Pre-drill the other holes in the frame strip (Ø 2.5 mm) and screw the frame strip tight (4.0 x 50 mm).

A

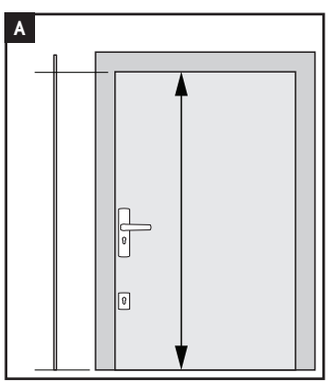

B

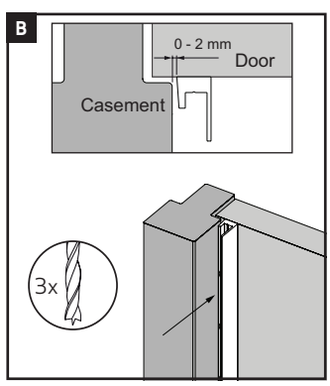

C

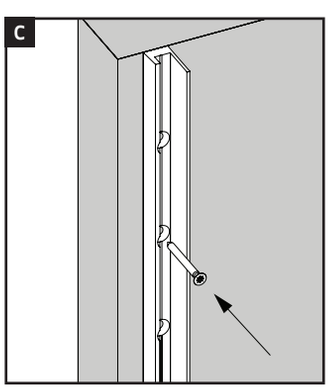

D

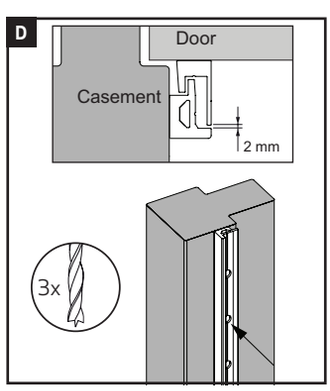

E

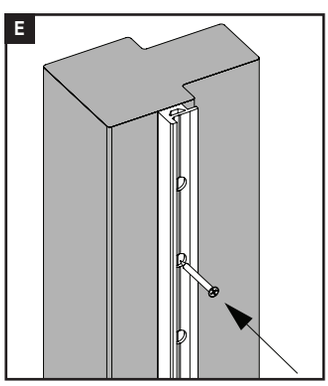

F

