73.013.2 (2-17)

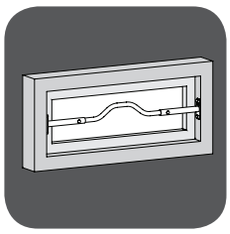

AXA HOME/SECURITY

EN

Barrier bar V3 UNI/CURVE

Installation in the opening

SKG

POLITIE KEURMERK VEILIG WONEN

Information

You have just acquired a high quality AXA product. The instructions below must be followed closely in order to effectively install and operate this product.

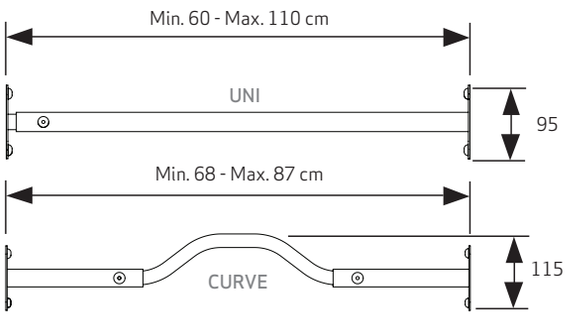

Application

Outward opening awning and top-hung windows.

Installation tools (recommended):

Tape measure, (battery) drill, screwdriver, Ø 3 mm drill bit, hacksaw or grinder, pencil or bradawl, 2.5 mm hex key.

Installation location

Horizontally in the opening

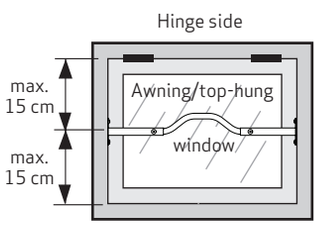

Minimum required installation space

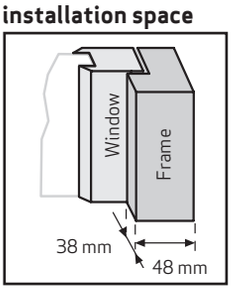

Installation manual

For problem-free operation of this product you must follow the instructions below carefully.

1 Determine the height of the barrier bar. Slide the bars into each other and mark off the drill holes left and right on the window casing using a pencil or bradawl. Pre-drill the marked off holes (Ø 3 mm, figure **A**).

The distance between the window casing and the barrier bar may be no more than 15 cm. If required, several barrier bars can be installed one above the other (for instance UNI above CURVE).

2 Install the barrier bar with the screws supplied and the plastic washers (5.0 x 50 mm, figure **B**).

3 Through the hole in the outer bar, drill a hole in the inner bar (Ø 4 mm, figure **C**). When installing the UNI barrier bar 1x , when installing the CURVE barrier bar 2x.

When installing the CURVE barrier bar, keep the bend pointing upwards while drilling the inner bar.

4 Mount the inner bar onto the outer bar using the screw (4.8 x 16 mm) with a plastic washer underneath (figure **D**).

5 After installation, fill at least on two ends two hex heads with steel putty or break the hex head with a drill, so that it can not be removed (figure **E**). Also do this to the screws locking the inner bar to the outer bar. Then cover each screw with a white finishing cap.

